SHIMANO

SUSTAIN A-RB

SA-4000FG

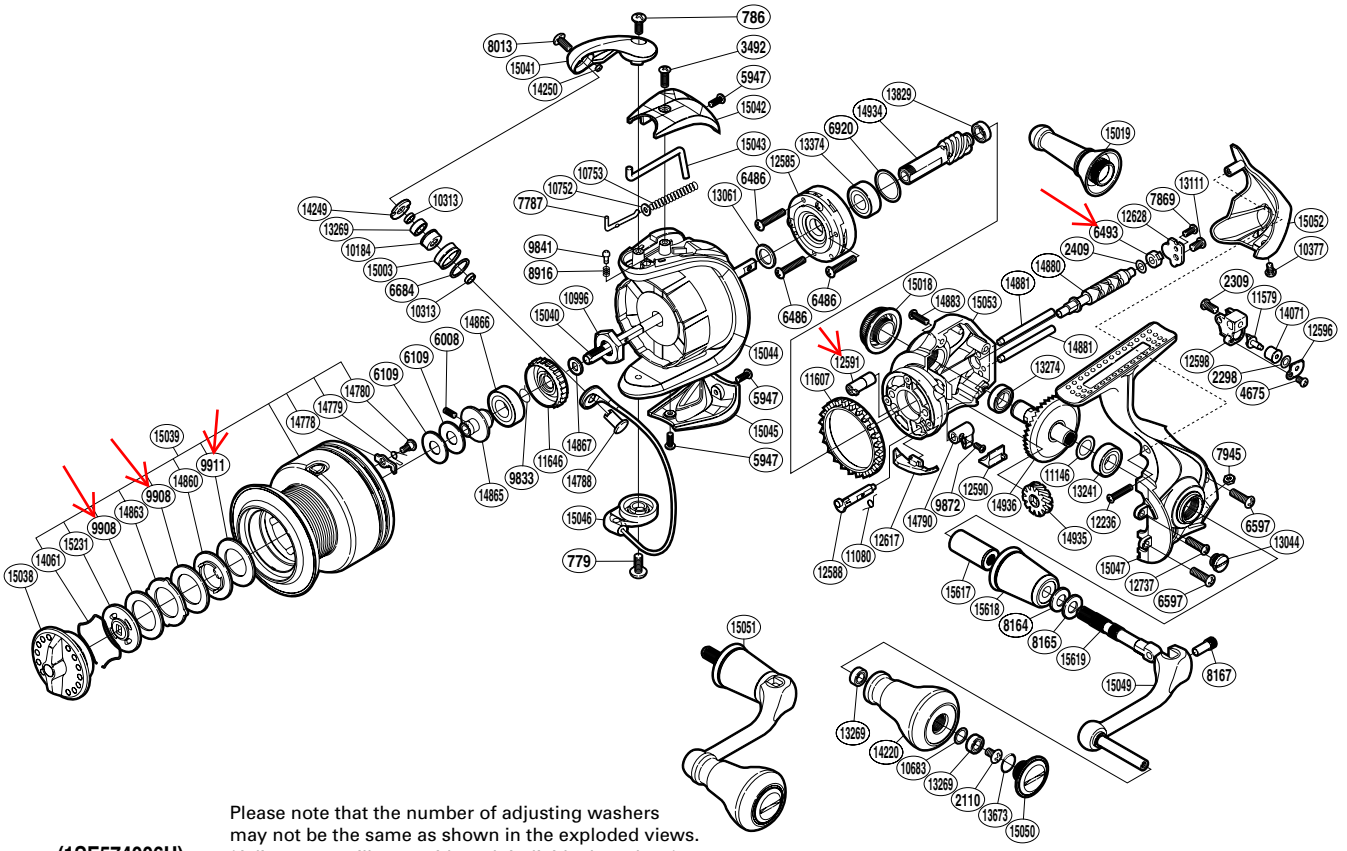

(1SE574006U)

Please note that the number of adjusting washers may not be the same as shown in the exploded views. (Adjustment will vary with each individual product.)

Part No.	Description	Part No.	Description	Part No.	Description
RD 0779	Screw	RD10996	Rotor Nut	RD14860	Key Washer
RD 0786	Screw	RD11080	Anti-Reverse Cam Spring	RD14863	Eared Washer
RD 2110	Screw	RD11146	Washer	RD14865	Bearing Bushing
RD 2298	Spacer	RD11579	Oscillating Pawl	RD14866	Ball Bearing
RD 2309	Screw	RD11607	Friction Ring	RD14867	Spool Support
RD 2409	Spacer	RD11646	Drag Click Ratchet	RD14880	Worm Shaft
RD 3492	Screw	RD12236	Screw	RD14881	Oscillating Guide
RD 4675	Screw	RD12585	Roller Clutch Assembly	RD14883	Screw
RD 5947	Screw	RD12588	Anti-Reverse Cam	RD14934	Pinion Gear
RD 6008	Set Screw	RD12590	Anti-Reverse Lever Cover	RD14935	Idle Gear
RD 6109	Spool Washer	RD12591	Worm Bushing (front)	RD14936	Drive Gear
RD 6486	Screw	RD12596	Oscillating Pawl Cover	RD15003	Line Roller
RD 6493	Worm Bushing (rear)	RD12598	Oscillating Slider	RD15018	Handle Screw Cap
RD 6597	Screw	RD12617	Bail Trip Strike	RD15038	Drag Knob
RD 6684	Line Roller Spacer	RD12628	Worm Shaft Retainer	RD15039	Spool Assembly
RD 6920	Spacer	RD12737	Screw	RD15040	Main Shaft
RD 7787	Bail Spring Guide A	RD13044	Oil Cap	RD15041	Bail Arm
RD 7869	Screw	RD13061	Washer	RD15042	Bail Spring Cover
RD 7945	Nut	RD13111	Screw	RD15043	Bail Trip Lever
RD 8013	Screw	RD13241	Ball Bearing	RD15044	Rotor
RD 8164	Coned Disc Spring	RD13269	Ball Bearing	RD15045	Bail Hold Support Guard
RD 8165	Large Handle Shank Washer	RD13274	Ball Bearing	RD15046	Bail Assembly
RD 8167	Handle Shaft Screw	RD13374	Ball Bearing	RD15047	Side Cover
RD 8916	Click Spring	RD13673	O Ring	RD15049	Handle Shank Assembly
RD 9833	Ratchet Spring	RD13829	Ball Bearing	RD15050	Handle Knob Seal
RD 9841	Click Pin	RD14061	Drag Washers Retainer	RD15051	Handle Assembly
RD 9872	Screw	RD14071	Oscillating Slider Bushing	RD15052	Rear Protector
RD 9908	Drag Washer	RD14220	Handle Knob	RD15053	Body
RD 9911	Drag Washer	RD14249	Line Roller Plate	RD15231	Key Washer
RD10184	Line Roller Bushing	RD14250	Line Roller Oil Cap	RD15617	Handle Shaft Cover B
RD10313	Bearing Spacer	RD14778	Drag Click	RD15618	Handle Shaft Cover A
RD10377	Screw	RD14779	Drag Click Spring	RD15619	Handle Shaft
RD10683	Washer	RD14780	Screw		
RD10752	Bail Spring Guide A Support	RD14788	Line Roller Support		
RD10753	Bail Spring	RD14790	Anti-Reverse Lever	RD15019	Reel Stand (accessory)

(240612)